DEGSON

Overview

Product information

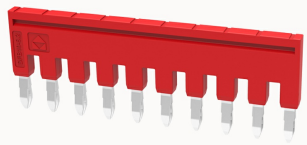

DFB10-6.2-11060000391

Bridge, Spacing: 6.2 mm， Color: red

Product advantages

☑Plug-in bridge，Flexible circuit connection can be realized；

Product certification

Technical data

Product drawing

3D model

Overview

Insulation Materials	PA
Flame retardant grade, in line with UL 94	V0
Number of potentials	10
color	red

Dimension

spacing	6.2mm

Environmental conditions

Ambient temperature (operation)	-40 °C ~ 105 °C（depending on derating curve）
Relative humidity (storage/transport)	25%~75%
Ambient temperature (storage / transport)	-25℃~60℃

Environmental protection

RoHS	No excessive harmful substances
REACh SVHC	Lead 7439-92-1

Accessories

Business data

Order number	11060000391
Packing unit	50
Minimum order quantity	50
Products weight (without packaging)	6.29

未注公差/General tolerances(mm)														
0 ~ 3	>3 ~ 6	>6 ~ 10	>10 ~ 18	>18 ~ 30	>30 ~ 50	>50 ~ 80	>80 ~ 120	>120 ~ 180	>180 ~ 250	>250 ~ 315	>315 ~ 400	>400 ~ 500	>500	0.1/10
±0.12	±0.18	±0.22	±0.26	±0.31	±0.37	±0.57	±0.80	±0.93	±1.05	±1.15	±1.60	±2.20	±2.50	±2°

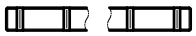

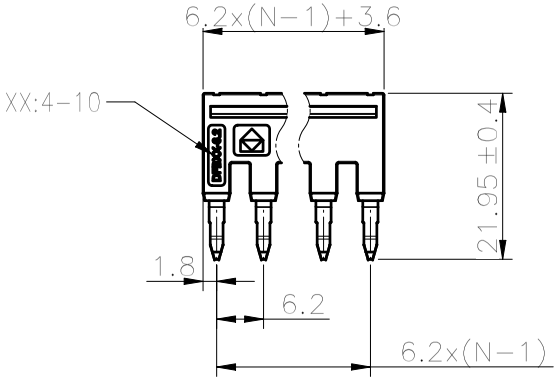

4-10P

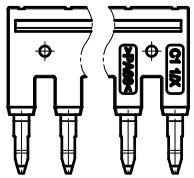

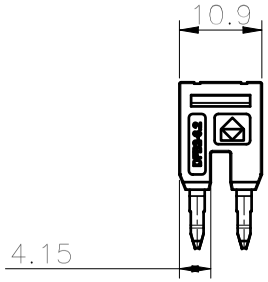

2P

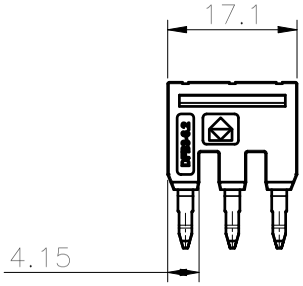

3P

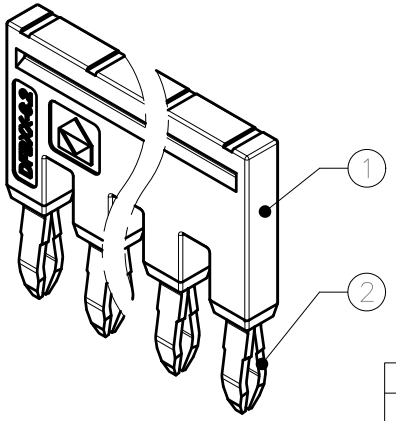

ITEM	NAME OF PART	MATERIAL	NOTES
2	Current_carrier	Copper	Sn_Plated
1	Housing	PA66	UL94V-0

间距/Pitch(mm)/线数范围/Poles	6.2/N=2~10P
使用温度范围/Operating temperature(°C)	-40~+105
符合RoHS环保要求/Conform to RoHS	Yes

DEGSON		MATERIAL: /	SURFACE: /
		MAT NO./REV: / /	MAT STATUS: /
APPD:	Peng M	2022.06.16	NAME: DFBXX-6.2-1Y-00A(H)
CHKD:	Gao WG	2022.06.16	
DRFT:	Huang RJ	2022.06.16	
A4		mm (inch)	

DRAWING NO.	TYPE	DRAWING STATUS	SCALE	SHEET
/	CUSTOMER DRAWING	/	1:1	1/1

REV	ECN	DESCRIPTION	DRFT	DATE
00	/	/	Huang RJ	2022.06.16

Transfer or duplication of this document as well as the utilization or communication of its contents are prohibited unless explicit authorization is granted. Violations will be liable for compensation. All rights reserved for patent, utility model or designs registrations. 非给予明确授权、否则禁止转让、复制、利用、交流本文件的内容，侵犯者将负赔偿责任。本公司保留对涉及发明、实用新型和外观专利的所有权利。